SIEMENS

# Fridge-freezer

# 冷藏冷冻冰箱

## KI39F..

siemens-home.com/welcome

en Instruction for Use
zh 使用说明书

Register your product online

## en Table of Contents


Safety and warning information ..... 3
Information concerning disposal ..... 5
Scope of delivery ..... 6
Ambient temperature
and ventilation ..... 6
Installation location ..... 7
Connecting the appliance ..... 7
Getting to know your appliance ..... 8
Switching on the appliance ..... 9
Setting the temperature ..... 9
Alarm functions ..... 10
Usable capacity ..... 10
Refrigerator compartment ..... 10
Super cooling ..... 11
The “cool-fresh” compartment ..... 11
Freezer compartment ..... 13
Max. freezing capacity ..... 13
Freezing and storing food ..... 13
Freezing fresh food ..... 14
Super freezing ..... 15
Thawing frozen food ..... 15
Interior fittings ..... 15
Switching off and disconnecting
the appliance ..... 16
Defrosting ..... 17
Cleaning the appliance ..... 17
Odours ..... 18
Light (LED) ..... 19
Tips for saving energy ..... 19
Operating noises ..... 19
Eliminating minor faults yourself ..... 20
Customer service ..... 22


## zh 目录


安全与警告提示 ..... 23
处理旧机器的注意事项 ..... 25
供货范围 ..... 25
注意室内气温和通风情况 ..... 25
安装地点 ..... 26
接通本机器 ..... 26
了解本机器 ..... 26
开机 ..... 27
设定温度 ..... 28
报警功能 ..... 28
有效总容量 ..... 28
冷藏室 ..... 29
智能速冷 ..... 29
维他保鲜室 ..... 29
冷冻室 ..... 30
最大冷冻量 ..... 31
冷冻和存放 ..... 31
冷冻新鲜食物 ..... 31
超级冷冻 ..... 32
解冻冷冻食物 ..... 33
机器配件 ..... 33
关机并停用本机器 ..... 34
除霜 ..... 34
清洁本机器 ..... 34
异味 ..... 35
照明 (LED) ..... 36
节约电源 ..... 36
运转时的噪声 ..... 36
自行解除小故障 ..... 37
售后服务 ..... 38

# Safety and warning information

## Before you switch ON the appliance

Please read the operating and installation instructions carefully! They contain important information on how to install, use and maintain the appliance.

The manufacturer is not liable if you fail to comply with the instructions and warnings. Retain all documents for subsequent use or for the next owner.

## Technical safety

The appliance contains a small quantity of environmentally friendly but flammable refrigerant R600a. Ensure that the tubing of the refrigerant circuit is not damaged during transportation and installation. Leaking refrigerant may cause eye injuries or ignite.

## If damage has occurred

- Keep naked flames and/or ignition sources away from the appliance,
- thoroughly ventilate the room for several minutes,
- switch off the appliance and pull out the mains plug,
- inform customer service.

The more refrigerant an appliance contains, the larger the room must be in which the appliance is situated. Leaking refrigerant can form a flammable gas-air mixture in rooms which are too small.
The room must be at least 1 $m^3$ per 8 g of refrigerant. The amount of refrigerant in your appliance is indicated on the rating plate inside the appliance.

If the power cord of this appliance is damaged, it must be replaced by the manufacturer, customer service or a similarly qualified person. Improper installations and repairs may put the user at considerable risk.

Repairs may be performed by the manufacturer, customer service or a similarly qualified person only.

Only original parts supplied by the manufacturer may be used. The manufacturer guarantees that only these parts satisfy the safety requirements.

A extension cable may be purchased from customer service only.

## Important information when using the appliance

- Never use electrical appliances inside the appliance (e.g. heater, electric ice maker, etc.). Explosion hazard!
- Never defrost or clean the appliance with a steam cleaner! The steam may penetrate electrical parts and cause a short-circuit. Risk of electric shock!
- Do not use pointed or sharp-edged implements to remove frost or layers of ice. You could damage the refrigerant tubes. Leaking refrigerant may cause eye injuries or ignite.
- Do not store products which contain flammable propellants (e.g. spray cans) or explosive substances in the appliance. Explosion hazard!
- Do not stand on or lean heavily against base of appliance, drawers or doors, etc
- For defrosting and cleaning, pull the mains plug out or switch off the fuse. Do not pull out the mains plug by tugging on the power cord.
- Store high-percentage alcohol tightly closed and standing up.
- Keep plastic parts and the door seal free of oil and grease. Otherwise, parts and door seal will become porous.
- Never cover or block the ventilation openings of the appliance!
- **Avoiding placing children and vulnerable people at risk:**

  At risk are children, people who have limited physical, mental or sensory abilities, as well as people who have inadequate knowledge concerning safe operation of the appliance.

  Ensure that children and vulnerable people have understood the hazards.

  A person responsible for safety must supervise or instruct children and vulnerable people who are using the appliance.

  Only children from 8 years and above may use the appliance.

  Supervise children who are cleaning and maintaining the appliance.

  Never allow children to play with the appliance.

- Do not store bottled or canned drinks (especially carbonated drinks) in the freezer compartment. Bottles and cans may burst!
- Never put frozen food straight from the freezer compartment into your mouth.
  Risk of low-temperature burns!
- Avoid prolonged touching of frozen food, ice or the evaporator pipes, etc.
  Risk of low-temperature burns!

### Children in the household

- Keep children away from packaging and its parts.
  Danger of suffocation from folding cartons and plastic film!
- Do not allow children to play with the appliance!
- If the appliance features a lock: keep the key out of the reach of children!

### General regulations

The appliance is suitable

- for refrigerating and freezing food,
- for making ice.

This appliance is intended for use in the home and the home environment.

The appliance is suppressed according to EU Directive 2004/108/EC.

The refrigeration circuit has been checked for leaks.

This product complies with the relevant safety regulations for electrical appliances (EN 60335-2-24).

This appliance is intended for use up to a maximum height of 2000 metres above sea level.

## Information concerning disposal

### ♻ Disposal of packaging

The packaging protects your appliance from damage during transit. All utilised materials are environmentally safe and recyclable. Please help us by disposing of the packaging in an environmentally friendly manner.

Please ask your dealer or inquire at your local authority about current means of disposal.

## ♻ Disposal of your old appliance

Old appliances are not worthless rubbish! Valuable raw materials can be reclaimed by recycling old appliances.

This appliance is labelled in accordance with European Directive 2012/19/EU concerning used electrical and electronic appliances (waste electrical and electronic equipment - WEEE). The guideline determines the framework for the return and recycling of used appliances as applicable throughout the EU.

⚠ **Warning**

Redundant appliances

1. Pull out the mains plug.
2. Cut off the power cord and discard with the mains plug.
3. Do not take out the trays and receptacles: children are therefore prevented from climbing in!
4. Do not allow children to play with the appliance once it has spent its useful life. Danger of suffocation!

Refrigerators contain refrigerant and gases in the insulation. Refrigerant and gases must be disposed of professionally. Ensure that tubing of the refrigerant circuit is not damaged prior to proper disposal.

# Scope of delivery

After unpacking all parts, check for any damage in transit.

If you have any complaints, please contact the dealer from whom you purchased the appliance or our customer service.

The delivery consists of the following parts:

- Built-in appliance
- Interior fittings (depending on model)
- Bag containing installation materials
- Operating instructions
- Installation manual
- Customer service booklet
- Warranty enclosure
- Information on the energy consumption and noises

# Ambient temperature and ventilation

## Ambient temperature

The appliance is designed for a specific climate class. Depending on the climate class, the appliance can be operated at the following temperatures.

The climate class can be found on the rating plate. Fig. 15

| Climate class | Permitted ambient temperature |
|---|---|
| **SN** | +10 °C to 32 °C |
| **N** | +16 °C to 32 °C |
| **ST** | +16 °C to 38 °C |
| **T** | +16 °C to 43 °C |

**Note:**
The appliance is fully functional within the room temperature limits of the indicated climatic class. If an appliance of climatic class SN is operated at colder room temperatures, the appliance will not be damaged up to a temperature of +5 °C.

## Ventilation

Fig. 1/26

The refrigeration unit is ventilated only via the ventilation grille in the base. Never cover the ventilation grille or place anything in front of it. Otherwise the refrigeration unit must work harder, increasing the power consumption.

# Installation location

Install the appliance in a dry, well ventilated room. The installation location should neither be exposed to direct sunlight nor near a heat source, e. g. a cooker, radiator, etc. If installation next to a heat source is unavoidable, use a suitable insulating plate or observe the following minimum distances to a heat source:

- 3 cm to electric or gas cookers.
- 30 cm to an oil or coal-fired cooker.

# Connecting the appliance

After installing the appliance, wait at least 1 hour until the appliance is switched on. During transportation the oil in the compressor may have flowed into the refrigeration system.

Before switching on the appliance for the first time, clean the interior of the appliance (see chapter “Cleaning the appliance”).

## Electrical connection

The socket must be near the appliance and also freely accessible following installation of the appliance.

The appliance complies with the protection class I. Connect the appliance to 220–240 V/50 Hz alternating current via a correctly installed socket with protective conductor. The socket must be fused with a 10 to 16 A fuse.

For appliances operated in non-European countries, check whether the stated voltage and current type match the values of your mains supply. This information can be found on the rating plate. Fig. 15

**⚠ Warning**

Never connect the appliance to electronic energy saver plugs.

Our appliances can be used with mains and sine-controlled inverters. Mains-controlled inverters are used for photovoltaic systems which are connected directly to the national grid. Sine-controlled inverters must be used for isolated applications (e.g. on ships or in mountain lodges) which are not connected directly to the national grid.

# Getting to know your appliance

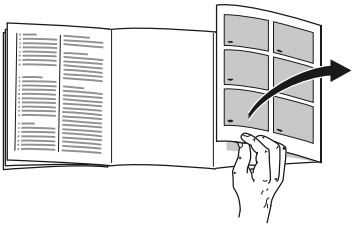

Please fold out the illustrated last page. These operating instructions refer to several models.

The features of the models may vary.

The diagrams may differ.

Fig. 1

A Refrigerator compartment
B Cool-fresh compartment
C Freezer compartment

1-8 Controls
9 On/Off button
10 Fixed glass shelf
11 Light, refrigerator compartment
12 Glass shelf “EasyLift”
13 Delicatessen container
14 Butter and cheese compartment
15 Egg rack
16 Door shelf “EasyLift”
17 Bottle holder
18 Shelf for large bottles
19 Light, cool-fresh compartment
20 “Cool-fresh” container
21 Humidity filter
22 Humidity container
23 Frozen food container (small)
24 Glass shelf
25 Frozen food container (large)
26 Ventilation opening

## Controls

Fig. 2

1 **Alarm button**
Used to switch off the warning signal, see chapter “Alarm function”.

2 **“Super” button (freezer compartment)**
Switches super freezing on and off.

3 **Temperature selection button freezer compartment**
The button sets the temperature in the freezer compartment.

4 **Temperature display freezer compartment**
The numbers correspond to the set freezer compartment temperatures in °C.

5 **“Super” button refrigerator compartment**
Switches super cooling on and off.

6 **Refrigerator compartment temperature selection button**
The button sets the temperature in the refrigerator compartment.

7 **Temperature display refrigerator compartment**
The numbers correspond to the set refrigerator compartment temperatures in °C.

8 **ON/OFF display**
The ON/OFF display is lit when the appliance is in operation.

# Switching on the appliance

Switch on the appliance with the On/Off button, Fig. 1/9. The temperature warning signal is switched off by pressing the alarm button, Fig. 2/1.

The temperature displays flash and the alarm button is lit until the appliance has reached the set temperatures.

The light in the refrigerator compartment is lit when the door is open.

The factory has recommended the following temperatures:

- Refrigerator compartment: +4 °C
- “Cool-fresh” compartment: at almost 0 °C
- Freezer compartment: -18 °C

## Operating tips

- After the appliance has been switched on, it may take several hours until the set temperatures have been reached.

  Do not put any food in the appliance beforehand.
- The fully automatic No Frost system ensures that the freezer compartment remains free of ice. Defrosting is not required.
- The front sides of the housing are partly heated slightly. This prevents condensation in the area of the door seal.
- If the freezer compartment door cannot be immediately re-opened after it has been closed, wait until the resulting low pressure has equalised.

# Setting the temperature

Fig. 2

## Refrigerator compartment

The temperature can be set from +2 °C to +8 °C.

Keep pressing temperature setting button on refrigerator compartment 6, until the required refrigerator compartment temperature is set.

The value last selected is saved. The set temperature is indicated on the temperature display for the refrigerator compartment 7.

## Cool-fresh compartment

The temperature in the “cool-fresh” compartment has been set to almost 0 °C at the factory and should not be changed if at all possible.

If frost forms on the refrigerated food, the temperature can be increased. (See chapter “Eliminating minor faults yourself”.)

## Freezer compartment

The temperature can be set from –16 °C to –24 °C.

Keep pressing temperature setting button freezer compartment 3 until the required freezer compartment temperature is set.

The value last selected is saved. The set temperature is indicated on temperature display for the freezer compartment 4.

# Alarm functions

Fig. 2

## Door opening alarm

If the appliance is left open for longer than one minute, the door alarm (continuous sound) switches on. Close the door or press the Alarm button 1 to switch the warning signal off again.

## Temperature alarm

The temperature warning signal switches on if the freezer compartment is too warm and the frozen food is at risk of thawing.

- Alarm button 1 flashes: Frozen food is or was at risk of thawing.
- Alarm button 1 is lit: Frozen food is not at risk of thawing.

**Note:**

Do not refreeze thawing or thawed food. Only ready meals (boiled or fried) may be refrozen.

No longer store the frozen produce for the max. storage period.

The alarm may switch on without any risk to the frozen food:

- when the appliance is switched on,
- when large quantities of fresh food are placed in the appliance,
- if the freezer compartment door is open too long.

## Switching off the alarm

Fig. 2

Press the alarm button 1 to switch off the warning signal.

# Usable capacity

Information on the usable capacity can be found inside your appliance on the rating plate. Fig. 15

## Fully utilising the freezer volume

The maximum amount of food can be placed in the freezer by removing all fittings. The food can be stacked directly on the shelves and in the bottom of the freezer compartment.

**Removing the fittings**

Pull out the frozen food container all the way, lift at the front and remove. Fig. 10

**Note:**

To insert the frozen food container with telescopic rails, the rails must be pulled out.

# Refrigerator compartment

The refrigerator compartment is the ideal storage location for ready meals, cakes and pastries, preserved food, condensed milk and hard cheese.

## Storing food

- Store fresh, undamaged food. The quality and freshness will then be retained for longer.
- In the case of ready-made products and bottled goods, observe the best-before date or use-by date specified by the manufacturer.
- To retain aroma, colour and freshness, pack or cover food well before placing in the appliance. This will prevent the transfer of flavours and the discolouration of plastic parts in the refrigerator compartment.
- Allow warm food and drinks to cool down before placing in the appliance.

**Note:**

Avoid contact between food and rear panel. Otherwise the air circulation will be impaired.

Food or packaging could freeze to the rear panel.

## Note the chill zones in the refrigerator compartment

The air circulation in the refrigerator compartment creates different chill zones:

- The coldest zones are on the rear panel and in the delicatessen containers. Fig. 3
- Warmest zone is at the very top of the door.

  **Note:**

  Store e.g. hard cheese and butter in the warmest zone. Cheese can then continue to release its flavour and the butter will still be easy to spread.

# Super cooling

Super cooling sets the refrigerator temperature to the coldest temperature setting for approx. 6 hours. Then the appliance automatically switches to the temperature set prior to super cooling mode.

Switch on super cooling mode, e.g.

- before placing large quantities of food in the refrigerator compartment.
- for the fast cooling of drinks.

## Switching on and off

Fig. 2

Press super button 5 refrigerator compartment.

The button is lit when super cooling is switched on.

**Note:**

When super cooling is switched on, increased operating noises may occur.

# The “cool-fresh” compartment

The temperature in the fridge is about 0 °C. The low temperature and the optimum moisture provide ideal storage conditions for fresh food.

Food can be kept fresh up to three times longer in the “cool-fresh” compartment than in the normal cooling zone – for even longer freshness, nutrient retention and flavour.

## “Cool-fresh” container

Fig. 1/20

The storage climate in the “cool-fresh” container offers ideal conditions for the storage of fish, meat, sausage, cheese and milk.

## Humidity container

Fig. 1/22

The humidity container is covered with a special filter which optimises retention of the air humidity in the storage compartment. As a result, there is up to 95 % air humidity in the humidity container, depending on the amount of products put in. This storage climate offers ideal conditions for fresh fruit, salad greens, vegetables, herbs or mushrooms.

**Notes**

- Fruit sensitive to cold (e.g. pineapple, banana, papaya and citrus fruit) and vegetables sensitive to cold (e.g. aubergines, cucumbers, zucchini, peppers, tomatoes and potatoes) should be stored outside the refrigerator at temperatures of approx. +8 °C to +12 °C for optimum preservation of quality and flavour.
- Condensation may form in the humidity container depending on the type and quantity of products stored. Remove condensation with a dry cloth.

## Foods suitable for “cool-fresh” container:

**In the “cool-fresh” container:**

Fig. 1/20

- Fish, seafood, meat, sausage, dairy products, ready meals.

**In the humidity container:**

Fig. 1/22

- Vegetables (e.g. carrots, asparagus, celery, leeks, beetroot, mushrooms, brassicas such as broccoli, cauliflower, Brussels sprouts, kohlrabi)
- Salad greens (e.g. lamb’s lettuce, iceberg lettuce, chicory, lettuce)
- Herbs (e.g. dill, parsley, chives, basil)
- Fruit (types insensitive to cold, e.g. apples, peaches, berries, grapes)

## Storage times (at 0 °C)

| **Depending on the initial quality** | |
|---|---|
| Fresh fish, seafood | up to 3 days |
| Poultry, meat (boiled/ fried) | up to 5 days |
| Beef, pork, lamb, sausage (cold meat) | up to 7 days |
| Smoked fish, broccoli | up to 14 days |
| Salad greens, fennel, apricots, plums | up to 21 days |
| Soft cheese, yoghurt, quark, buttermilk, cauliflower | up to 30 days |

# Freezer compartment

## Use the freezer compartment

- To store deep-frozen food.
- To make ice cubes.
- To freeze food.

**Note:**

Ensure that the freezer compartment door has been closed properly. If the door is open, the frozen food will thaw. The freezer compartment will become covered in thick ice. Also: waste of energy due to high power consumption!

# Max. freezing capacity

Information about the max. freezing capacity within 24 hours can be found on the rating plate. Fig. 15

## Prerequisites for max. freezing capacity

- Switch on super freezing before placing fresh products in the compartment (see chapter entitled “Super freezing”).
- Removing the fittings
- The food can be stacked directly on the shelves and in the bottom of the freezer compartment.

  **Note:**

  Do not cover the ventilation slots on the rear panel with frozen food.
- Freeze large quantities of food preferably in the very top compartment where food freezes particularly quickly and therefore also gently.

# Freezing and storing food

## Purchasing frozen food

- Packaging must not be damaged.
- Use by the “use by” date.
- Temperature in the supermarket freezer must be -18 °C or lower.
- If possible, transport deep-frozen food in an insulated bag and place quickly in the freezer compartment.

## Note when loading products

- Preferably freeze large quantities of food in the top compartment, where food freezes particularly quickly and therefore also gently.
- Place the food over the whole area of the compartments or the frozen food containers.

  **Note:**

  Food which is already frozen must not come into contact with the food which is to be frozen. If required, move the frozen food to other frozen food containers.

## Storing frozen food

Insert frozen food container all the way to ensure unrestricted air circulation.

# Freezing fresh food

Freeze fresh and undamaged food only.

To retain the best possible nutritional value, flavour and colour, vegetables should be blanched before freezing. Aubergines, peppers, zucchini and asparagus do not require blanching.

Literature on freezing and blanching can be found in bookshops.

**Note:**

Keep food which is to be frozen away from food which is already frozen.

- The following foods are suitable for freezing:
  Cakes and pastries, fish and seafood, meat, game, poultry, vegetables, fruit, herbs, eggs without shells, dairy products such as cheese, butter and quark, ready meals and leftovers such as soups, stews, cooked meat and fish, potato dishes, soufflés and desserts.
- The following foods are not suitable for freezing:
  Types of vegetables, which are usually consumed raw, such as lettuce or radishes, eggs in shells, grapes, whole apples, pears and peaches, hard-boiled eggs, yoghurt, soured milk, sour cream, crème fraîche and mayonnaise.

## Packing frozen food

To prevent food from losing its flavour or drying out, place in airtight containers.

1. Place food in packaging.
2. Remove air.
3. Seal the wrapping.
4. Label packaging with contents and date of freezing.

**Suitable packaging:**

Plastic film, tubular film
made of polyethylene, aluminium foil, freezer containers.
These products are available
from specialist outlets.

**Unsuitable packaging:**

Wrapping paper, greaseproof paper, cellophane, bin liners and used shopping bags.

**Items suitable for sealing packaged food:**

Rubber bands, plastic clips, string, cold-resistant adhesive tape, etc.

Bags and tubular film
made of polyethylene can be sealed with a film heat sealer.

## Shelf life of frozen food

Storage duration depends on the type of food.

At a temperature of -18 °C:

- Fish, sausage, ready meals and cakes and pastries:

  up to 6 months
- Cheese, poultry and meat:

  up to 8 months
- Vegetables and fruit:

  up to 12 months

# Super freezing

Food should be frozen solid as quickly as possible in order to retain vitamins, nutritional value, appearance and flavour.

Several hours before placing fresh food in the freezer compartment, switch on super freezing to prevent an unwanted temperature rise.

As a rule, 4–6 hours is adequate.

This appliance runs constantly and the freezer compartment drops to a very low temperature.

If the max. freezing capacity is to be used, super freezing must be switched on for 24 hours before the fresh produce is placed in the freezer compartment.

Smaller quantities of food (up to 2 kg) can be frozen without “super freezing”.

**Note:**

When super freezing is switched on, increased operating noises may occur.

## Switching on and off

Fig. 2

Press “super” button freezer compartment 2.

If the super freezing has been switched on the button is lit.

Super freezing automatically switches off after approx. 2½ days.

# Thawing frozen food

Depending on the type and application, select one of the following options:

- at room temperature
- in the refrigerator
- in an electric oven, with/without fan assisted hot-air
- in the microwave

⚠ **Caution!**

Do not refreeze thawing or thawed food. Only ready meals (boiled or fried) may be refrozen.

No longer store the frozen produce for the max. storage period.

# Interior fittings

(not all models)

## Glass shelf “EasyLift”

Fig. 4

The height of the glass shelf can be adjusted without taking it out.

Pull right lever to move the shelf upwards. Pull left lever to move the shelf downwards.

**Notes**

- Only ever press one lever.
- If a load exceeds 5 kg, the position of the shelf can no longer be changed.

## Fixed glass shelf

Fig. 5

To change the position of the fixed glass shelf, press buttons on the underside and detach the glass shelf from the fixing. Reposition stopper. Re-insert glass shelf and fix by applying light pressure.

## Door shelf “EasyLift”

Fig. 6

The height of the door shelves can be adjusted without taking them out.

Simultaneously press up the buttons on the underside of the door shelves to move the door shelves downwards. They can be moved upwards without pressing the buttons.

## Bottle shelf

Fig. 7

Bottles can be stored securely on the bottle shelf. If the bottle shelf is not required, it can be hung under the glass shelf.

## Ice cube tray

Fig. 8

1. Fill the ice cube tray ¾ full of drinking water and place in the freezer compartment.
2. If the ice tray is stuck to the freezer compartment, loosen with a blunt implement only (spoon-handle).
3. To loosen the ice cubes, twist the ice tray slightly or hold briefly under flowing water.

## Ice pack

(if enclosed, quantity varies)

If a power failure or malfunction occurs, the ice packs can be used to slow down the thawing process. The longest storage time is obtained by placing the ice pack on the food in the top compartment.

The ice packs can also be used to cool food temporarily, e.g. in a cold bag.

# Switching off and disconnecting the appliance

## Switching off the appliance

Fig. 1

Press the On/Off button 9.
Refrigerating unit and light switch off.

## Disconnecting the appliance

If you do not use the appliance for a prolonged period:

1. Switch off the appliance.
2. Pull out mains plug or switch off fuse.
3. Clean the appliance.
4. Leave the appliance door open.

# Defrosting

## Refrigerator and “cool-fresh” compartments

While the appliance is running, condensation droplets or frost form on the rear panel of the refrigerator compartment. As the rear panel defrosts automatically, it is not necessary to remove the frost or the condensation droplets. The condensation runs through the condensation channel and the drainage hole to the evaporation pan where it evaporates.

**Note:**

Keep the condensation channel and drainage hole clean, so the condensation can drain off. Fig. 9

## Freezer compartment

The fully automatic NoFrost system ensures that the freezer compartment remains free of ice. Defrosting is no longer required.

# Cleaning the appliance

⚠ **Caution!**

- Do not use abrasive, chloride or acidic cleaning agents or solvents.
- Do not use scouring or abrasive sponges. The metallic surfaces could corrode.
- Never clean shelves and containers in the dishwasher. The parts may become deformed!

Proceed as follows:

1. Before cleaning: Switch off the appliance.
2. Pull out mains plug or switch off fuse.
3. Take out the food and store in a cool location. Place ice pack (if available) on the food.
4. Wait until the layer of frost has thawed.
5. Clean the appliance with a soft cloth, lukewarm water and a little pH neutral washing-up liquid. The rinsing water must not run into the light or through the drainage hole into the evaporation pan.
6. Wipe the door seal with clear water only and then wipe dry thoroughly.
7. After cleaning reconnect and switch the appliance back on.
8. Put the food back into the appliance.

**Notes**

- Regularly clean the condensation channel and drainage hole, Fig. 9/B, with a cotton bud to ensure that the condensation can drain. The water conduction channel, Fig. 9/A, can be taken out for cleaning.
- After cleaning, the stopper must be re-inserted into the drainage hole of the refrigerator compartment for functional reasons.

## Interior fittings

All variable parts of the appliance can be taken out for cleaning.

### Taking out the glass shelf “EasyLift”

Fig. 4

Move glass shelf all the way upwards and take out.

### Taking out the door shelf “EasyLift”

Fig. 6

Move door shelf all the way upwards and take out.

### Taking out the fixed glass shelf

Fig. 5

Press buttons on the underside and detach from the fixing.

### Taking out the frozen food container

Fig. 10

Pull out the frozen food container all the way, lift at the front and remove.

**Note:**

Before inserting the frozen food container with telescopic rails, remove the latter.

### Removing the container

Fig. 12

Tilt container forwards and take out.

To insert the container, place the front of the container on the telescopic rails and push into the appliance. The container is engaged by pushing it into the appliance.

### Taking out the humidity filter

Fig. 1/21

The humidity filter over the humidity container can be taken out for cleaning. To do this, first take out the humidity container and pull out the humidity filter. Lift off the filter cover, Fig. 11, and take out the filter. Clean in lukewarm water, leave to dry and re-assemble.

### Remove telescopic rails

Fig. 14

1. Pull out the telescopic rail.
2. Push lock in the direction of the arrow.
3. Detach telescopic rail from the rear pin.
4. Push telescopic rail together, push backwards above the rear pin and disengage.

### Installing telescopic rails

1. Place the extended telescopic rail on the front pin.
2. Pull the telescopic rail forwards slightly until it engages.
3. Place telescopic rail on the rear pin.
4. Push lock backwards.

# Odours

If you experience unpleasant odours:

1. Switch off the appliance with the On/Off button. Fig. 1/9.
2. Take all food out of the appliance.
3. Clean interior (see chapter “Cleaning the appliance”).
4. Clean all packages.
5. Seal strong smelling food in order to avoid odours from forming.
6. Switch the appliance on again.
7. Store food in the appliance.
8. Check whether the formation of odours is still occuring after 24 hours.
9. Change odour filter, Fig. 13.

   The odour filter is situated behind the upper “cool-fresh” container. Replacement filters are available from your customer service.

# Light (LED)

Your appliance features a maintenance-free LED light.

These lights may be repaired by customer service or authorised technicians only.

# Tips for saving energy

- Install the appliance in a dry, well ventilated room! The appliance should not be installed in direct sunlight or near a heat source (e.g. radiator, cooker).

  If required, use an insulating plate.
- Allow warm food and drinks to cool down before placing in the appliance.
- Thaw frozen food in the refrigerator compartment and use the low temperature of the frozen food to cool refrigerated food.
- Open the appliance as briefly as possible.
- The ice packs slow down the thawing process of the frozen food in the event of a power failure or malfunction. Place the ice packs directly on the food in the top compartment.
- Ensure that the freezer compartment door is always closed properly.
- The arrangement of the fittings does not affect the energy rating of the appliance.
- To prevent increased power consumption, occasionally clean the ventilation opening with a paint brush or vacuum cleaner.

# Operating noises

## Quite normal noises

**Droning**

Motors are running (e.g. refrigerating units, fan).

**Bubbling, humming or gurgling noises**

Refrigerant is flowing through the tubing.

**Clicking**

Motor, switches or solenoid valves are switching on/off.

## Preventing noises

**The appliance is not level**

Please align the installation cavity with a spirit level. To do this, use the height-adjustable feet of the cavity or place something underneath.

**Containers or storage areas wobble or stick**

Please check the removable parts and re-insert them correctly if required.

**Receptacles are touching each other**

Move the receptacles slightly away from each other.

# Eliminating minor faults yourself

Before you call customer service:

Please check whether you can eliminate the fault yourself based on the following information.

Customer service will charge you for advice – even if the appliance is still under guarantee!

| Fault | Possible cause | Remedial action |
|---|---|---|
| Temperature differs greatly from the set value. | | In some cases it is adequate to switch off the appliance for 5 minutes.<br>If the temperature is too high wait a few hours and check whether the temperature has approached the set value.<br>If the temperature is too low check the temperature again the next day. |
| Bottom of the refrigerator compartment is wet. | The condensation channel or drainage hole are blocked. | Clean the condensation channel and the drainage hole. See chapter Cleaning the appliance. Fig. 9 |
| The temperature in the refrigerator compartment is too cold. | Temperature has been set too low. | Increase the temperature. |
| The refrigerating unit is switching on more frequently and for longer. | Appliance opened frequently. | Do not open the appliance unnecessarily. |
| | The ventilation openings have been covered. | Remove obstacles. |
| Appliance has no refrigeration capacity. | Appliance has been switched off. | Press the On/Off button. |
| The light does not work. | Power failure. | Check whether the power is on. |
| The display does not illuminate. | The fuse has been switched off. | Check the fuse. |
| | The mains plug has not been inserted properly. | Check whether the mains plug is secure. |
| Appliance is not cooling, temperature display and light are lit. | Showroom mode is switched on. | Hold down alarm button, Fig 2/1, for 10 seconds until an acknowledgement signal sounds.<br>After a short time check whether your appliance is cooling. |

| Fault | Possible cause | Remedial action |
|---|---|---|
| The light does not function. | The LED light is defective. | See chapter “Light (LED)” section. |
| | Appliance was open too long.<br>Light is switched off after approx. 10 min. | When the appliance is closed and opened, the light is on again. |
| Temperature display for the refrigerator compartment flashes. Fig. 2/7 | Appliance opened frequently. | Do not open the appliance unnecessarily. |
| | Too much food was placed in the compartment. | Before placing food in the freezer, press the super button 5. |
| | The airing and ventilation openings are blocked. | Remove obstacles. |
| The “cool-fresh” compartment is too warm or too cold. | The standard setting has been set too high or too low (e.g. if there is frost in the “cool-fresh” compartment). | The temperature in the “cool-fresh” compartment can be set to be 2 steps warmer and/or colder, Fig. 2. If the refrigerator compartment temperature is set to 4, the “cool-fresh” compartment has a temperature of almost 0 °C.<br>1. Press super button on refrigerator compartment 5 for 3 seconds until a signal sounds.<br>Temperature display on refrigerator compartment 7 flickers.<br>2. Change the setting using the temperature setting button on refrigerator compartment 6.<br>Setting 2 – coldest setting<br>Setting 8 – warmest setting<br>The set temperature is saved after one minute. |
| Warning signal sounds and the temperature display flashes.<br>The freezer compartment is too warm! Frozen food is at risk. | Freezer compartment door is open. | See chapter entitled “Alarm functions”. |
| | Too much food was placed in the freezer compartment at once. | |

# Customer service

Your local customer service can be found in the telephone directory or in the customer-service index. Please provide customer service with the appliance product number (E-Nr.) and production number (FD).

These specifications can be found on the rating plate. Fig. 15

To prevent unnecessary call-outs, please assist customer service by quoting the product and production numbers. This will save you additional costs.

## Repair order and advice on faults

Contact information for all countries can be found on the enclosed customer service list.

| | | |
|---|---|---|
| GB | 0344 892 8999 | Calls charged at local or mobile rate. |
| IE | 01450 2655 | 0.03 € per minute at peak. Off peak 0.0088 € per minute. |
| US | 866 447 4363 | toll-free |

# 安全与警告提示

## 起用本机器以前

请仔细阅读使用说明书和安装说明书！ 说明书中有重要的安装、使用与维护等说明。

如果不遵守使用说明书中的提示和警告，制造商将不负任何责任。请将所有资料保存好，以便以后随时查阅或者提供给以后的使用者。

## 技术安全

本机器含有少量具环保性却 易燃性的制冷剂 R600a。请确保在运输或安装时，制冷回路的配管不受损坏。制冷剂可能会 喷出且伤到眼睛或起火燃烧。

## 机器受损时

- 明火或点火源应远离本机器。
- 让房间好好通风几分种。
- 关机并拔出电源插头，
- 通知售后服务部门。

机器中的冷却剂量越大，安装机器的空间也应该越大。空间太小时，且发生冷却剂外漏情况，可能会产生易燃性的气体 - 空气混合物。
每 8 公克冷却剂，应至少具备 1 立方米的空间。本机器的冷却剂量标示在机器内铭牌上。

本机器的接电源线受损时，必须由生产厂家，售后服务或者有相当资格的人员进行更换。如果进行不合格的安装或修理工作，可能会对使用者造成很大的危险。

只允许生产厂家专业人员、售后服务部门或其它有类似资格的人员对本机器进行修理工作。

只可使用生产厂家的原装零备件。制造商只保证原产零件能满足安全要求。

电源线的延长线只允许通过售后服务部门购得。

## 使用本机器时

- 请勿在机器内使用其它电器 ( 例如加热器、电气制冰器等 )。引爆危险！
- 请勿用蒸汽清洗机来对本设备进行除霜或清理！ 蒸汽可能会接触到电气元件并造成断路。有电击危险！
- 清除霜层或冰层时，请勿采用尖形或锐边的用具。如此可能会损坏制冷剂管。制冷剂可能会喷出再着火且伤到眼睛。
- 请勿存放含有燃气的物品（如喷雾罐等）或易爆物质。引爆危险！
- 请勿将底座、抽屉或机器门当梯级误用。
- 进行除霜或清理时，请拔出电源插头或关掉保险装置。要拉出插头，不要拉住电源电线。
- 度数高的酒类一定要密封好且只要立放。

- 塑料部件和门密封材料不要用油脂沾染，否则塑料部件和门密封材料会变疏松。
- 绝不可盖住或阻挡本设备通风口和排气口。
- **避免对儿童或者容易发生危险情况人员的风险:**

  容易发生危险情况的人员为儿童、有身体障碍者、有心理障碍者、有感官障碍者以及缺乏必要的知识者使他们无法安全地使用本机器。

  请确定儿童和容易发生危险情况的人员充分了解了可能会发生的危险情况。

  儿童或容易发生危险情况人员使用本机器时，必须有负责安全问题的人员在现场看管或指导其使用。

  儿童使用本机器时，必须为八周岁以上的儿童。

  儿童对本机器进行清洁或维护时，必须受成人的看管。

  切勿让儿童用机器玩耍。
- 冷冻室内不可存放瓶罐或罐头(特别是含碳酸的饮料)。瓶子和罐头可能会爆开！
- 取出冷冻物时，请勿马上含在嘴里。
  冻伤危险！
- 请避免手与冷冻食物、冰、蒸发器管等长时间接触。
  冻伤危险！

**家中有儿童时应注意事项**

- 包装材料和包装材料的部分不要给孩童玩耍用。
  可折叠的纸箱和塑料薄膜可能会有窒息危险！
- 本机器不是孩童用的玩具！
- 有门锁的机器：
  钥匙应远离儿童保存好！

**一般性规定**

本机器适于

- 食物的冷藏和冷冻,
- 制冰块。

本机器适于在私人住家中使用。

本机器依据欧盟标准 2004/108/EC 被消除无线电干扰。

冷却循环已进行密封检查。

本产品符合有关电器产品的安全规定 (EN 60335-2-24 欧盟标准 )。

本机最高可在 海拔 2000 米以上使用。

# 处理旧机器的注意事项

## ♻ 处理包装材料

包装材料可以保护您的机器，在搬运过程中不受损，所有这些材料对环境无害并能再生处理。请帮助我们：请将包装材料按环保标准去处理。

至于目前所采用的处理方法，请向专业机构询问。

## ♻ 处理旧机器

旧机器并非无价值之废品！经由合乎环保标准的处理可以回收很有价值的原材料。

对本设备据有关电气和电子设备报废的欧洲规定 2012/19/EU（waste electrical and electronic equipment – WEEE）进行标记。该规定管理在欧洲范围内对报废设备的回收和再生。

⚠ **警告**

不再使用的机器应依下列步骤处理：

1. 拔出电源插头，
2. 再切断电源电线并连同电源插头一起丢掉，
3. 不要拿出层架和容器，以便防止孩童爬入机器内！
4. 请勿让孩童用旧机器玩耍。有窒息危险！

冷藏冷冻设备中有冷却剂，其绝热材料包含各种气体，这些冷却剂和气体需由专家人员处理，因此请勿损坏到冷却循环管道。

# 供货范围

拆开包装后，请检查所有部件是否出现搬运时发生的损伤。

发现有问题时，请联系购买机器的供应商或者联系本公司的售后服务部门。

供货范围包括下列部分：

- 嵌入式机器
- 机器配备（依机型而定）
- 装有安装时所需的材料的袋子
- 使用说明书
- 安装说明
- 售后服务说明
- 保证书
- 耗电量和噪声方面的说明

# 注意室内气温和通风情况

## 室内温度

本机器适于一定的气候等级，依据气候等级的不同，本机器可在下列室内温度条件下使用。

气候等级标示在机器铭牌上，图 **15**。

| 气候等级 | 允许的环境温度 |
|---|---|
| **SN** | :+10 ℃ 到 32 ℃ |
| **N** | :+16 ℃ 到 32 ℃ |
| **ST** | :+16 ℃ 到 38 ℃ |
| **T** | :+16 ℃ 到 43 ℃ |

**提示：**

本机器在所指定气候等级的室内温度极限内可维持完整无误的功能。当一台属于气候等级 SN 的机器在更低的室内温度下使用时，直到 +5 °C 的温度下可以排除对机器的损坏。

## 通风

图 1/26

压缩机的通风和排气只通过底座中的通风格栅进行。绝对不要盖住通风格栅或在该格栅前方摆放东西，否则会提高压缩机的负荷，因而提高耗电量。

# 安装地点

干燥的、通风良好的空间最适合放置本机器。安装地点不应受阳光直晒，也不应靠近热源，例如炉灶、暖气设备等。如果无法避免把本机器置放在热源附近，请使用适当隔热板且于热源保持下列最小间距：

- 与电炉或煤气炉保持 3 公分的间距。
- 与烧油或烧煤的炉灶保持 30 公分的间距。

# 接通本机器

安装本机器后要至少等待一个小时，才可以起用。在搬运机器的过程中，压缩机中的油可能会在冷却系统中移位。

起用前，应清理机器内部 ( 参阅 “ 清理 ” 章节的相关说明 )。

## 电气连接

电源插座必须安装在机器附近的地方，机器安装后也须方便接近插座。

本机器符合保护级 I 的标准。本机器应该通过符合相关规定的接地插座连接到 220-240 V/50Hz 的交流电电源。插座应具备 10 安培到 16 安培的保险装置。

在欧洲以外其它国家使用的机器，应该检查机器所标示电压和电流类型是否和当地国电网相符。这些资料标示在机器铭牌上。图 15

**警告**

决不能将冰箱和省电插头相连。

在使用我们的冰箱时，可以使用正弦逆变器和并网逆变器。直接与公共电网相连接的太阳能发电设备需使用并网逆变器。在独立应用的场合，例如在船上或者在山上度假小屋等无法连接到公共电网等场合使用冰箱时，必须确保要使用正弦逆变器。

# 了解本机器

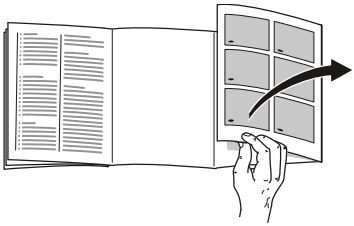

请翻开最后一页的图示。本使用说明书适于多种机型。

各机型的配备有多种选项供选择。

因此可能与本说明书中的图示会有所差异。

图 1

| | |
|---|---|
| A | 冷藏室 |
| B | 维他保鲜室 |
| C | 冷冻室 |
| | |
| 1-8 | 操作元件 |
| 9 | 开 / 关按钮 |
| 10 | 固定的玻璃搁盘 |
| 11 | 冷藏室照明 |
| 12 | “EasyLift” 玻璃搁盘 |
| 13 | 精美食品盒 |
| 14 | 存放黄油和奶酪的保鲜盒 |
| 15 | 存放鸡蛋的搁架 |

16 “EasyLift” 门搁架
17 瓶挡
18 大瓶搁架
19 保鲜抽屉照明
20 保鲜抽屉
21 滤湿器
22 保湿抽屉
23 冷冻抽屉 ( 小型 )
24 玻璃层板
25 冷冻抽屉 ( 大型 )
26 通风口和排气口

## 操作元件

图 **2**

1 **警报按钮**
用于关掉警报声 ( 参阅警报功能的说明 )。

2 **“super” ( 超級冷凍 ) 按钮**
用来开 / 关超级冷冻功能。

3 **设定冷冻室温度的按钮**
用此按钮可设定冷冻室内温度。

4 **冷冻室温度指示灯**
数值显示冷冻室温度的摄氏度。

5 **“super” ( 智能速冷 ) 按钮**
用来开 / 关智能速冷功能。

6 **冷藏室温度設定按鈕**
用此按钮可设定冷藏室的温度。

7 **冷藏室温度显示**
数字是以 °C 为单位设定的冷藏室温度。

8 **工作指示灯**
机器工作时，工作指示灯发亮。

# 开机

用开 / 关按钮 , 图 **1**/9, 启动本机器。通过触摸报警按钮，图 **2**/1，将停止温度警示音。

温度指示灯闪烁并且报警按钮指示灯亮起，一直到机器达到所设温度为止。

机器门敞开时，冷藏室内照明会亮起。

出厂时，我们建议以下温度：

- 冷藏室 +4 °C
- 保鲜抽屉 接近：0 °C
- 冷冻室 –18 °C

## 使用本机器的特别注意事项

- 开机后，可能需要等数小时，机器才会达到所设定的温度。

  达到此温度以前，请暂不要放入食品。
- 全自动化无霜系统使冷冻室不会形成霜层。因此不需要除霜。
- 机壳正面具备局部加温功能，如此可以防止机门密封条部位会产生冷凝水。
- 冷冻室门关上以后，如果无法马上重新打开，请等候片刻直到低压得到了平衡为止。

# 设定温度

图 2

## 冷藏室

温度的设定范围为 +2 °C 到 +8 °C。

重复触摸温度设定按钮 6，直到设定好所需的冷藏室温度为止。

机器将保存最新的设定值。设定好的温度显示在冷藏室温度显示器上 7。

## 保鲜抽屉

保鲜抽屉的温度在出厂时已设定为接近 0 °C，这种设定应尽量不要更改。

如果在冷藏食品上形成霜层，温度可稍微提高一点 ( 参阅 " 自行解除小故障 " 的说明 )。

## 冷冻室

温度的设定范围为 -16 °C 到 -24 °C。

重复触摸冷冻室温度设定按钮 3，一直到机器显示所需冷冻室温度为止。

机器将保存最新的设定值。设定好的温度显示 4 在冷冻室温度显示器上。

# 报警功能

图 2

## 机器门警报声

当机器门敞开时间超过 1 分钟，门警报声会响起。关门时，警报声会停止。

## 温度报警

冷冻室温度过高时，也就是冷冻食品有被解冻的危险，温度警报声就会响起。

- 报警按钮 1 闪烁：冷冻物现在或者在过去存在解冻的危险。
- 报警按钮 1 发亮：冷冻物没有解冻的危险。

**提示：**

部分解冻或已解冻的食物请勿再冷冻。只有通过煮、炒等处理成熟食后，才可以重新冷冻。

但此时不能再利用最长存放时间。

在下列没有解冻危险的情况下，报警声也可能会响起：

- 启用本机器时。
- 存放大量新鲜食品时。
- 冷冻室门打开的时间太久时。

## 关闭报警

图 2

按下 1 号警报按钮后，警报声会停止。

# 有效总容量

有效容量的说明，请参见机器铭牌。图 15

## 充分利用最大冷冻能力

为了摆放尽量大量冷冻食物，可以将所有配件拿出来。食物可以直接摆放在搁盘和冷冻室底面上。

### 拿出配备

取出冷冻抽屉时，请拉出到底，再把前端稍微抬起就可以拿出来。图 10

**提示：**

插入带有伸展导轨的冷冻抽屉时，导轨必须处于伸展状态。

# 冷藏室

冷藏室是存放熟食、糕点、罐装食物、炼乳和硬奶酪等最佳的地方。

## 放入食物时应注意事项

- 请存放新鲜、无受损食物。这样香味和新鲜度可保持更长时间。
- 在方便食物和分装食物，要注意食物生产商注明的最佳食用日期或者使用期。
- 为了保持食物的香味、色泽和新鲜度，应将食物包装好或存放时要盖住。还可以避免来自塑料件的变味或变色。
- 热的食物和饮料应等冷却后才放入机器中。

**提示：**

请不要让食物和冰箱背面相接触。这样会影响空气流通，

或者食物跟包装有可能会冻住在冰箱背面上。

## 注意冷藏室内不同的制冷区

由于冷藏室内的空气流通，会形成不同温度的区域：

- 温度最低的区在后壁和精美食品盒中。图 **3**
- 温度最高的区在门内侧最上方。

  **提示：**

  请在温度最高的区存放奶酪、黄油等食品。这样，奶酪的香味得以保留，黄油也保持在易于涂抹的状态。

# 智能速冷

采用智能速冷功能时，会持续大约 6 小时把冷藏室冷却到尽量低的温度。之后会自动采用智能速冷以前设定的温度。

在下列情况下可以启动智能速冷功能：

- 存放大量食品以前。
- 使饮料快速变冷。

## 启动与关闭

图 **2**

触按冷藏室 " 智能速冷 /“super” 按钮 5。

在开启了 “ 智能速冷 ” 功能的情况下，此按钮会亮起。

**提示：**

启动了智能速冷功能之后，冰箱的工作噪音可能会变大。

# 维他保鲜室

维他保鲜室的温度保持在接近 0 °C。低温和最佳空气湿度为了新鲜食物提供了理想的存放条件。

维他保鲜室中的食物保存时间比一般冷藏区长很多，最多长 3 倍 – 可更久保持食物的新鲜、营养和美味。

## 保鲜盒

图 **1**/20

保鲜盒内的温度接近 0 °C，空气湿度为 50% 左右。

这样的存放条件最适合存放鱼类、肉类、香肠类、奶酪和牛奶等。

## 保湿抽屉

图 1/22

保湿抽屉由特殊的滤湿器遮盖，使抽屉中的空气湿度保持在最佳状态。根据保湿抽屉中存放的食品不同，其中的空气湿度可以高达 95%。这种存放气候提供了存放新鲜水果、沙拉菜、蔬菜、香草或蘑菇的最佳条件。

**提示**

- 为了达到保持品质和美味的最佳效果，易受低温影响的水果 ( 例如菠萝、香蕉、木瓜和其他热带水果等 ) 和蔬菜 ( 例如茄子、黄瓜、西葫芦、甜椒、西红柿、土豆等 ) 应该在冰箱以外在约 8~12 °C 环境温度下存放。
- 视保湿盒中存放的食品量和种类的不同，其中可能会有冷凝水产生。用干抹布擦去冷凝水。

## 适合于保鲜的食品:

**在保鲜抽屉中:**

图 1/20

鱼类、海鲜、肉类、香肠、乳制品、熟食。

**在保湿抽屉中:**

图 1/22

- 蔬菜 ( 例如胡萝卜、芦笋、芹菜、大葱、红甜菜、蘑菇、菜类例如绿菜花、菜花、抱子甘蓝、球茎甘蓝等 )
- 沙拉类 ( 例如野莴苣、冰山形莴苣、菊苣、莴苣等 )
- 香草类 ( 例如莳萝、香菜、香葱、韭菜、罗勒、九层塔等 )
- 水果类 ( 不会因受冷而腐烂的水果，例如苹果、桃子、浆果、葡萄等 )

## 存放时间 ( 在 0 °C 温度下 )

| 依食品原本质量而定 | |
|---|---|
| 鲜鱼、海产 | 最多 3 天 |
| 家禽类、肉类等 ( 已煮 / 炒 / 烤熟 ) | 最多 5 天 |
| 牛肉、猪肉、羊肉、香肠 ( 切成片 ) | 最多 7 天 |
| 熏鱼、绿菜花 | 最多 14 天 |
| 莴苣、茴香、桃子、李子、梅子等 | 最多 21 天 |
| 软乳酪、酸奶、凝乳、菜花 | 最多 30 天 |

# 冷冻室

## 使用冷冻室

- 储藏已冷冻食物，
- 制冰块，
- 欲冷冻的食物。

**提示：**

请注意冷冻室门应随时关上！ 机门开启时，冷冻食物会解冻，冷冻室也会形成厚的霜层。另外：高的耗电量是能源的浪费！

# 最大冷冻量

有关 24 小时内最大冷冻量的说明，请参见机器铭牌。图 15

## 利用最大冷冻能力的前提条件

- 在放入新鲜食品之前开启智能速冻功能（参阅智能速冻章节）。
- 取出附件。
- 将食品直接叠放在搁盘和冷冻室底面。

  **提示：**

  冷冻食品不应盖住背面的通风孔。
- 量较大的食品放在最上方的存放格中可以被最快地冻透。在那里会特别快地冷冻起来同时可保持品质。

# 冷冻和存放

## 购买冷冻食物

- 包装应完整无损，
- 注意保质期，
- 商店的冷藏箱内的温度应至少保持在-18 °C 或更低的温度，
- 最好应采用隔热袋将冷冻食物搬运，请尽快放入冷冻室内。

## 放入食物时应注意事项

- 量较大的食物放在最上方的存放格中可以被最快地冻透。在那里会特别快并保持品质地冷冻起来。
- 请将食物均匀地分散在冰箱抽屉或冷冻抽屉中。

  **提示：**

  准备冷冻的食物不要与已冷冻食物相接触。如果有需要，可以将已冻透食品放入其他冷冻容器中。

## 存放冷冻食物

冷冻食品盒推入到底，以确保机器内部空气循环顺畅。

# 冷冻新鲜食物

请只要冷冻新鲜无瑕疵的食物。

为了尽量保持蔬菜的营养价值、美味和色泽，在冷冻以前应用沸水泡一下。冷冻茄子、青红黄椒、西葫芦或芦笋时，则不需要用沸水泡。

详细介绍冷冻和用沸水泡蔬菜的专书，可到书店去购买。

**提示：**

准备冷冻的食物不要与已冷冻食物相接触。

- 适合冷冻的食物：
  糕点、鱼类和海产、肉类、野味、家禽类、蔬果类、调味草类、去壳鸡蛋、乳制品 ( 奶酪、黄油、凝乳等 )、熟菜或剩的菜例如汤类、浓汤、熟的肉类和鱼类、土豆做的菜、烤饼、甜点等。
- 不适合冷冻的食物：
  通常生吃的蔬菜类，例如生菜沙拉叶、小洋萝卜、带壳的鸡蛋、葡萄，整个的苹果、梨子或桃子，煮熟的鸡蛋、酸奶、酸奶油或蛋黄酱等。

## 包装冷冻食物

为了保持食物的美味且避免食物变干，应采用密封包装。

1. 把食物放入包装材料中，
2. 挤出空气，
3. 密封包装材料，
4. 在包装上注明内容和冷冻日期。

**适合的包装材料:**

塑料薄膜，聚已烯管形薄膜，铝箔纸，冷冻用罐。
这些产品可以到专业商店购买。

**不适合的包装材料:**

包装纸、防油纸、保鲜膜、垃圾袋、用过的购物袋。

**适合的密封材料:**

橡皮筋，塑胶夹，细绳，耐冷胶布带等。

也可以使用聚乙烯的袋子或软管薄膜，再用薄膜熔焊器密封。

## 冷冻食物的保质期

食品保质期依食品类型而定。

在温度设定为 -18°C 的情况下：

- 鱼类、香肠、做好的菜肴、糕点等：
  最多 6 个月
- 乳酪、家禽类、肉类等：
  最多 8 个月
- 蔬菜、水果等：
  最多 12 个月

# 超级冷冻

食物应尽快冻透，才能保持食物的维生素、营养价值、美观和美味。

放入新鲜食品时，应在几小时以前起动超级冷冻功能，以避免发生温度上升。

在一般情况下，4~6 小时以前起动即可。

起动后，机器会一直不停地运转，冷冻室内温度会降到很低的温度。

如果要利用最大冷冻量，则需要在放入新鲜食物 24 小时之前起动 “ 超级冷冻 ” 功能。

较小量食物 (2 公斤以下 ) 可以不需 “ 超级冷冻 ” 功能进行冷冻。

**提示：**

起动超级冷冻功能时，机器可能会发出较大的运行噪声。

## 启动与关闭

图 **2**

触摸冷冻室 2“super”( 智能 ) 按钮。

智能速冻功能启动时，相应按键会亮起。

最晚约过两天半后，“ 智能速冻 ” 功能将会自动停止。

# 解冻冷冻食物

依据种类和用途的不同，可选择下列方式之一：

- 用室内温度，
- 在冰箱内，
- 用电烤箱 ( 有 / 无热气风扇均可 )，
- 用微波炉。

⚠ **注意！**

部分解冻或已解冻的食物请勿再冷冻。只有通过煮、炒等处理成做好的菜肴后，才可以重新冷冻。

但此时不能再利用最长冷冻时间。

# 机器配件

( 只有部分机型 )

## “EasyLift” 玻璃搁盘

图 **4**

玻璃搁盘的高度可以调节，需要调节时不必先拿出。

拉住右侧操作杆，使搁盘向上移动。拉住左侧操作杆，使搁盘向下移动。

**提示**

- 一次只能操作其中一个操作杆。
- 若超过 5 公斤的重量，搁盘的位置就无法再更改。

## 固定的玻璃搁盘

图 **5**

如果要更改固定玻璃搁盘的位置，应按压底部的按钮，将玻璃搁盘从固定装置松开。调动塞子的位置。将玻璃搁盘重新装上并通过按压来固定。

## “EasyLift” 门搁架

图 **6**

门搁架的高度可以调节，需要调节时不必先拿出。

将门搁架底部的按钮同时向上压，使门搁架向下移动。向上移动时，不需要按压按钮。

## 瓶搁架

图 **7**

瓶搁架内可以安全地摆放玻璃瓶。当不需要瓶搁架时，可挂在玻璃搁盘底下。

## 制冰盒

图 **8**

1. 把饮用水倒入制冰盒中，装 ¾ 满，再放入冷冻室。
2. 使用不利的用具 ( 例如食匙把等 ) 松开冻住的制冰盒。
3. 松解冰块时，请在制冰盒上洒一点水龙头水或者将制冰盒扭曲一下即可。

## 保冷盒

( 部分机型附有保冷盒，数量各有不同 )

停电或者机器发生故障时，保冷盒可使存放的冷冻食物的温度延缓提升，冷冻食物就不会太快解冻。请将保冷盒放入最上方冷藏室，直接放在食物上面。

保冷盒也可暂时拿出来，用来保冷其它食物，例如保冷袋中的食物。

# 关机并停用本机器

## 关机

图 1

按下 9 开关键。
制冷机和机内照明灯会停止。

## 停用本机器

您如果较长时间不需要使用本机器，
则请按照下列步骤进行：

1. 关机，
2. 拔出电源插头或关掉保险装置，
3. 清理机器，
4. 敞开机器门。

# 除霜

## 冷藏室和保鲜抽屉

机器在工作状态下，冷藏室背面上会形成冷凝水滴或霜层。由于冷藏室背面会自动除霜，无需清除霜层或溶解水的水滴。溶解水会经过溶解水排水槽和排水孔流到集水盘，在那里自动蒸发。

**提示：**

溶解水槽和排水孔应保持清洁，以便使溶解水能顺畅得流走。图 9

## 冷冻室

全自动化无霜系统使冷冻室不会形成霜层。因此不需要除霜。

# 清洁本机器

⚠ **注意！**

- 请不要使用含沙粒或含酸的清洁剂和溶剂。
- 请不要使用磨擦性或会刮伤表面的海绵。否则机器金属表面可能会生锈。
- 机器的搁盘和抽屉不宜在洗碗机中清洗。部件可能会变形！

请依下列步骤进行：

1. 清洁前应先关机。
2. 拔出电源插头或关闭保险装置。
3. 取出食品并存放在比较凉的地方。如果机器附带蓄冷器，则应把此蓄冷器放在食品上。
4. 请等到霜层完全溶化为止。
5. 用软布、温水和少量 pH 中和洗碗精清洁本机器。不可让洗涤用水流向照明灯中或通过排水口流到集水盘中。
6. 机门密封条只要用清水擦拭，清洁完后应彻底擦干。
7. 清洁完后，请恢复本机器电源并开机。
8. 重新摆放食品。

**提示**

- 溶解水槽和排水孔，图 9/B，应定期用棉花棒等用具清洁，使溶解水能顺畅地流出。需要清洁时，可将水槽，图 9/A，拿出。
- 清洁完成后，基于机器功能特点的原因，需将冷藏室排水孔的插塞插回原处。

## 附件

需要清理时，可将机器内所有活动部件拿出。

### 拿出玻璃搁盘 “EasyLift”

图 4

将玻璃搁盘移动到最上面，再拿出。

### 拿出门搁架 “EasyLift”

图 6

将门搁架移动到最上面，再拿出。

### 拿出固定的玻璃搁盘

图 5

按压底部的按钮并将搁盘从固定装置松开。

### 拿出冷冻抽屉

图 10

取出冷冻抽屉时，请拉出到底，再把前端稍微抬起就可以拿出来。

**提示：**

放入具有伸展导轨的冷冻抽屉以前，需将这些伸展导轨拉出来。

### 拿出抽屉

图 12

将抽屉向前倾斜并拿出。

放回时，将抽屉前端放在伸缩导轨上，然后推入机内。将抽屉推入机内时，使抽屉固定。

### 拿出滤湿器

图 1/21

需要时，可将保湿抽屉上方的滤湿器拿出来清理。拿出时，先拿出保湿抽屉，然后再拉出滤湿器。将滤湿器盖拿开，图 11，再拿出滤湿器。用温水清理后让其晾干，然后再组合。

### 移除伸缩导轨

图 14

1. 拉出伸展导轨。
2. 将锁紧装置顺箭头方向推动。
3. 松开伸缩导轨后方螺栓。
4. 收缩导轨，在后方螺栓的上方向后推并松开。

### 安装伸缩导轨

1. 伸缩导轨处于伸展状态时放在前端螺栓上。
2. 将导轨稍微向前拉，使导轨啮合。
3. 将导轨插入到后方螺栓处。
4. 将锁紧装置向后推动。

## 异味

如果发现有异味：

1. 用开 / 关按钮将冰箱关机。图 1/9。
2. 从机器中取出所有食品。
3. 清洁机器内部（参见清洁机器章节）。
4. 清洁所有包装。
5. 为了避免产生异味，对气味很强的食品要采用不透气的包装。
6. 重新开机。
7. 将食品放入到冰箱中。
8. 在 24 小时之后重新检查是否仍有异味产生。
9. 更换除异味滤芯，图 13。

   异味滤芯位于上层保鲜抽屉后面。新滤芯可向售后服务部门购得。

# 照明 (LED)

本机器装有无需维修的 LED 照明。

对照明的修理工作只能由售后服务部门或者授权的专业人员执行。

# 节约电源

- 本机器应安放于干燥通风流畅之处！ 机器不要受阳光直晒，也不要靠近其它热源 ( 暖气设备或炉灶等 )，

  如果需要，请使用隔热板。
- 热的食物和饮料应等冷却后再放入机器中！
- 解冻冷冻食品时，建议先放入冷藏室中，寒冷的冷冻食品有助于冷藏室中其它食品的冷藏。
- 开门时，应尽快再关上！
- 为了预防在发生停电或故障时使食品温度快速上升，应将蓄冷器直接放在最上面一格的食品上。
- 请注意冷冻室门应随时关上！
- 配备的布置情况不会影响到本设备的能耗情况。
- 为了避免不必要的过高耗电量，应每隔一段时间用毛刷或吸尘器清理通风孔和排气孔。

# 运转时的噪声

## 正常的声音

**营营声**

电机在运转中 ( 例如制冷机、风扇等 )。

**咕噜声、营营声或汩汩声**

表示冷却剂在管道中流动。

**咔嚓声**

表示电机、开关或电磁阀在起动或停止。

## 避免噪声

**机器不稳**

用水平仪将机器调平。可以调节螺纹脚或者放垫片。

**抽屉或层架摇动或者卡住**

请检查可拿出的部件，如果需要重新插入。

**容器相碰**

稍微挪开容器。

# 自行解除小故障

在向售后服务站求助之前：

请您检查，是否能够按照下列说明自行解除故障。

售后服务站的咨询费用必须由用户自己承担，尽管是保质期内也需自己承担！

| 故障 | 可能的原因 | 如何解除故障 |
|---|---|---|
| 冷藏室地面上积水。 | 溶解水槽或排水孔堵塞。 | 清洁溶解水槽和排水孔 ( 参阅清洁机器的说明 )。图 9 |
| 冷冻室内温度过低。 | 温度设定过低。 | 将温度调高一些。 |
| 制冷机启动的频率越来越频繁，运行时间也越来越长。 | 机器的门常常被打开。 | 无必要时，请勿打开本机器的门。 |
| | 通风口和排气口被盖住。 | 将阻挡物移除。 |
| 机器无制冷作用。<br>机器内照明不亮。<br>显示面板不亮。 | 将设备关机。 | 触按开 / 关按钮。 |
| | 停电 | 检查是否通电。 |
| | 保险装置断开。 | 检查保险装置。 |
| | 电源插头未插好。 | 检查电源插头是否固定好。 |
| 机器无制冷作用，温度指示灯和照明亮起。 | 机器处于展览工作模式。 | 持续按下警报按钮 2/1 10 秒钟不放，一直到听到确认声为止。<br>过一段时间之后，请确认机器是否在制冷。 |
| 机器内照明灯不亮。 | LED 照明发生故障。 | 参见 “ 照明 (LED)” 章节。 |
| | 机器门开门时间过长。<br>约 10 分钟过后，照明会熄灭。 | 只要将门关上再重新打开，照明灯会重新发亮。 |
| 冷藏室温度指示灯闪烁。图 2/7 | 机器门常常被打开。 | 无必要时，请勿打开机器门。 |
| | 一次性放入了过量食品。 | 摆放前，应触摸 “ 智能 ” 按钮 5。 |
| | 通风口和排气口被盖住。 | 将阻挡物移除。 |

| 故障 | 可能的原因 | 如何解除故障 |
|---|---|---|
| 保鲜抽屉内温度过高或过低。 | 标准设定值太高或太低 ( 例如保鲜抽屉形成霜层时 )。 | 保鲜抽屉内的温度可调高或调低，最多可调两级 , 图 2。当冷藏室温度被设定为第 4 级，保鲜抽屉的温度将接近 0 °C。<br>1. 持续 3 秒钟按压冷藏室智能速冷按钮 5 不放，直到响起信号音为止。<br>冷藏室温度指示灯闪烁 7。<br>2. 用冷藏室温度设定按钮 6 可以更改所设温度。<br>第 2 级 – 最低温设定<br>第 8 级 – 最高温设定<br>1 分钟后，所设定的温度被保存。 |
| 警示音响起，温度指示灯闪烁。<br>冷冻室内温度过高！ 冷冻食品有解冻的危险！ | 冷冻室门打开了。 | 参见 “ 报警功能 ” 章节。 |
| | 一次性放入过多食品。 | |

# 售后服务

请查电话簿或售后服务站目录，就可查到离您住处最近的服务站。联系时，请告知售后服务部门工作人员本机器的品种代号 (E-Nr.) 和制造系列号 (FD-Nr.)。

这些号码标示在机器铭牌上。图 15

告诉我们正确的品种代号（E-Nr.）和制造系列号（FD-Nr.），就可以避免工作人员不必要的出差路程，从而您可免额外花费。

## 当发生故障时，要委托售后服务部门进行修理或要得到相关咨询，请打下列电话号码联系

各国的详细联系资料，请参考附带的售后服务部门目录。

| | | |
|---|---|---|
| CN | 400 889 9999 | Call rates depend on the network used. |

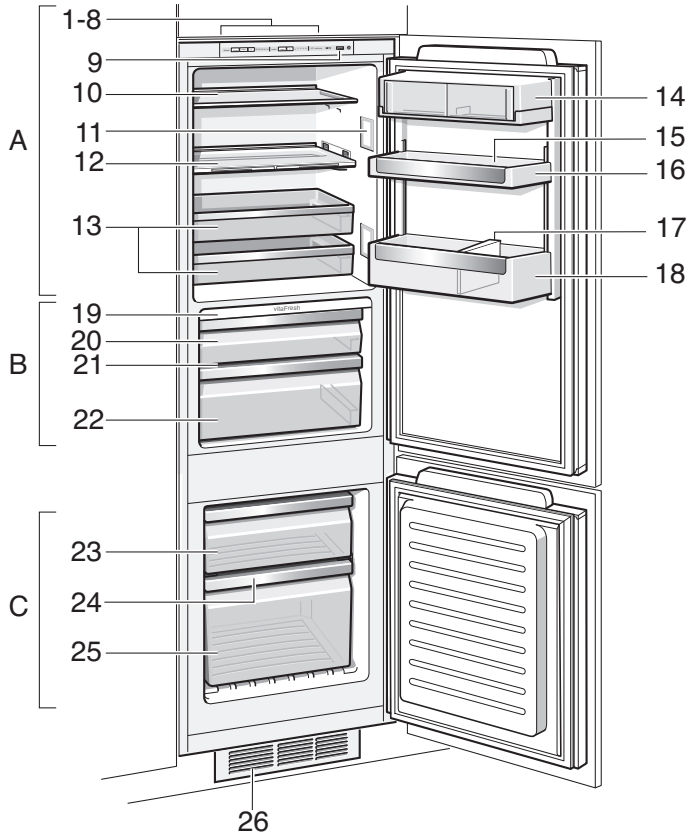
1-8
9
10
11
12
13
A
14
15
16
17
18
19
20
21
22
B
23
24
25
C
26

1

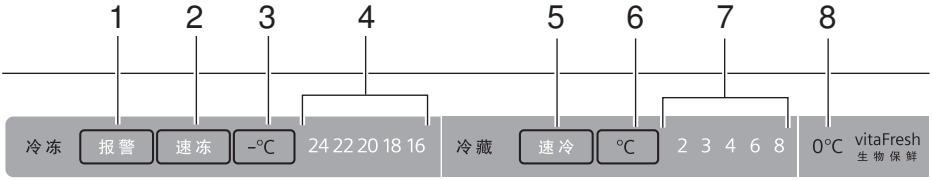
1
2
3
4
5
6
7
8
冷冻
报警
速冻
–°C
24 22 20 18 16
冷藏
速冷
°C
2 3 4 6 8
0°C
vitaFresh
生物保鲜

2

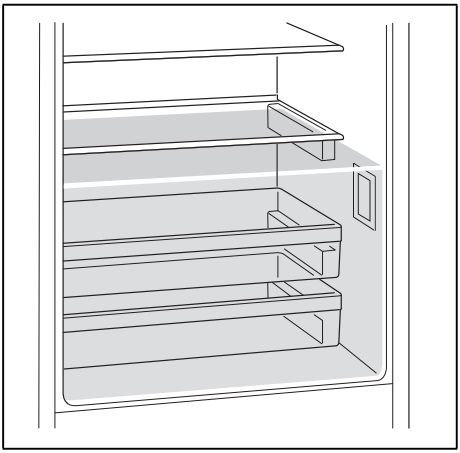

3

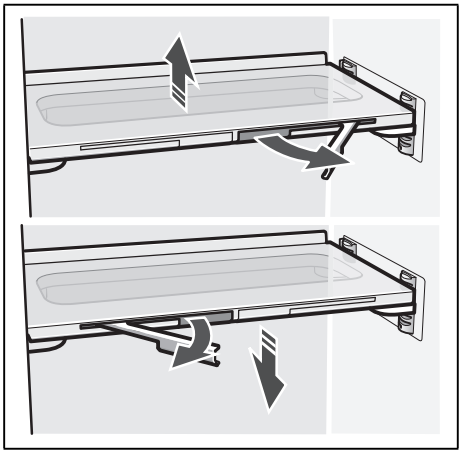

4

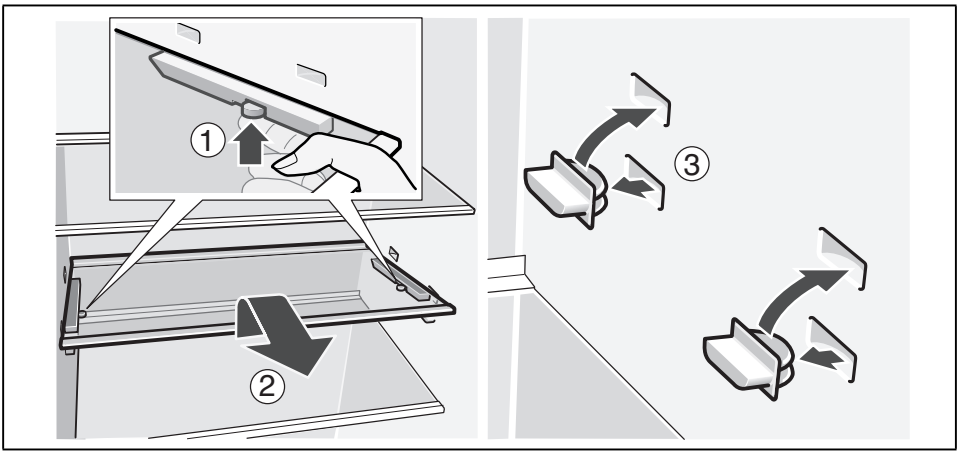


5

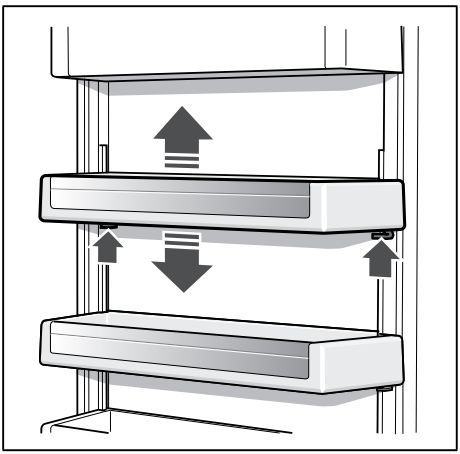

6

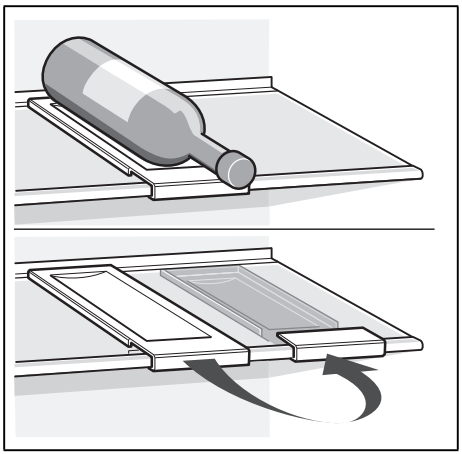

7

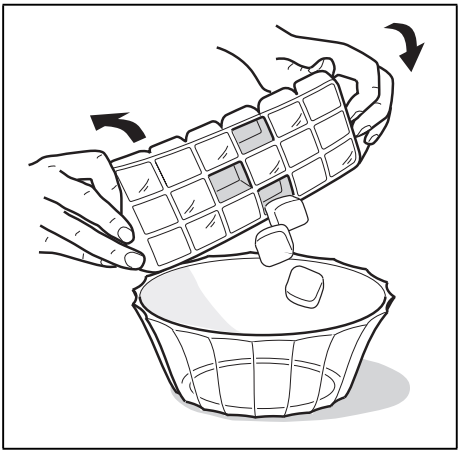

8

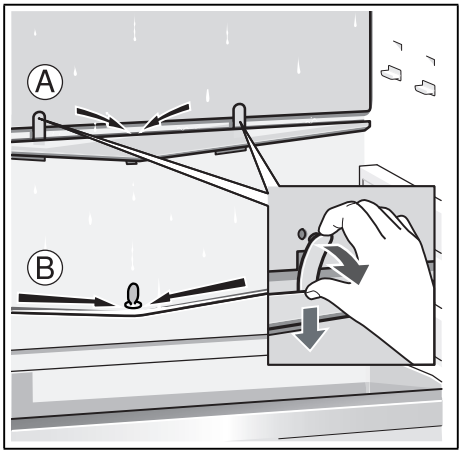


9

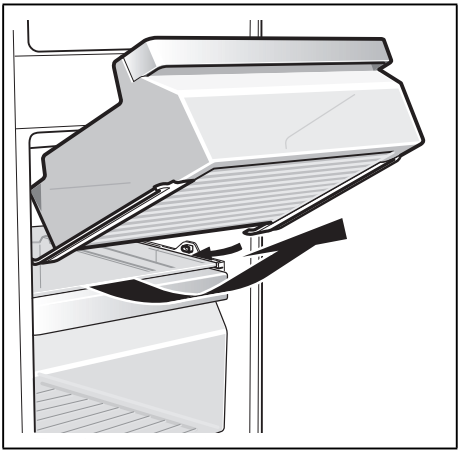

10

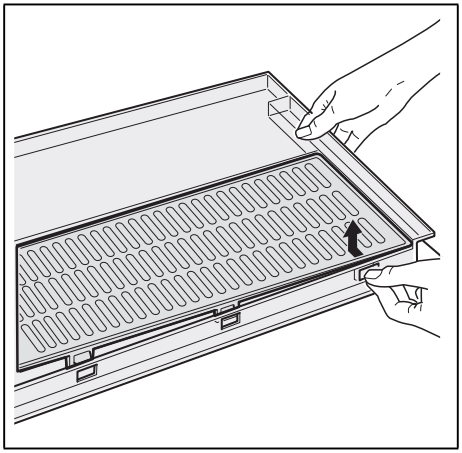

11

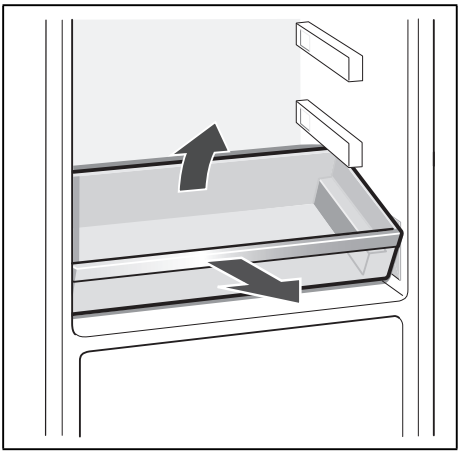

12

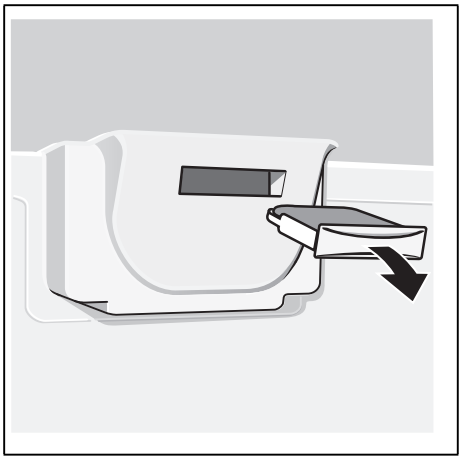

13

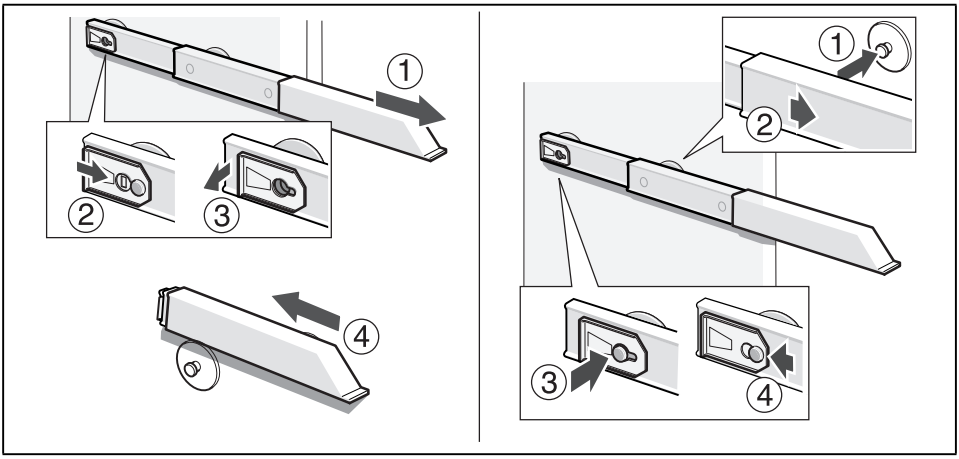


14

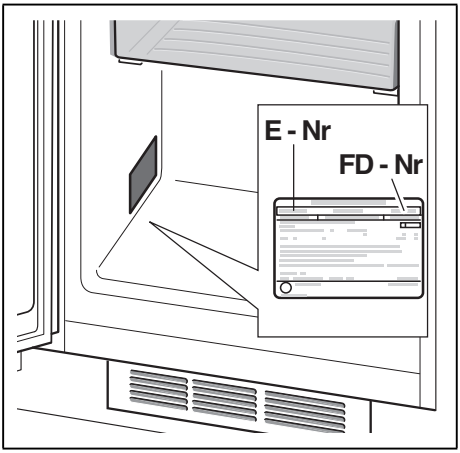


15

BSH Hausgeräte GmbH
Carl-Wery-Straße 34
81739 München, GERMANY

**siemens-home.com**

Manufactured by BSH Hausgeräte GmbH under Trademark License of Siemens AG
由博西家用电器（中国）有限公司根据西门子股份公司的商标许可制造

**9000948056** (9510)
zh, en